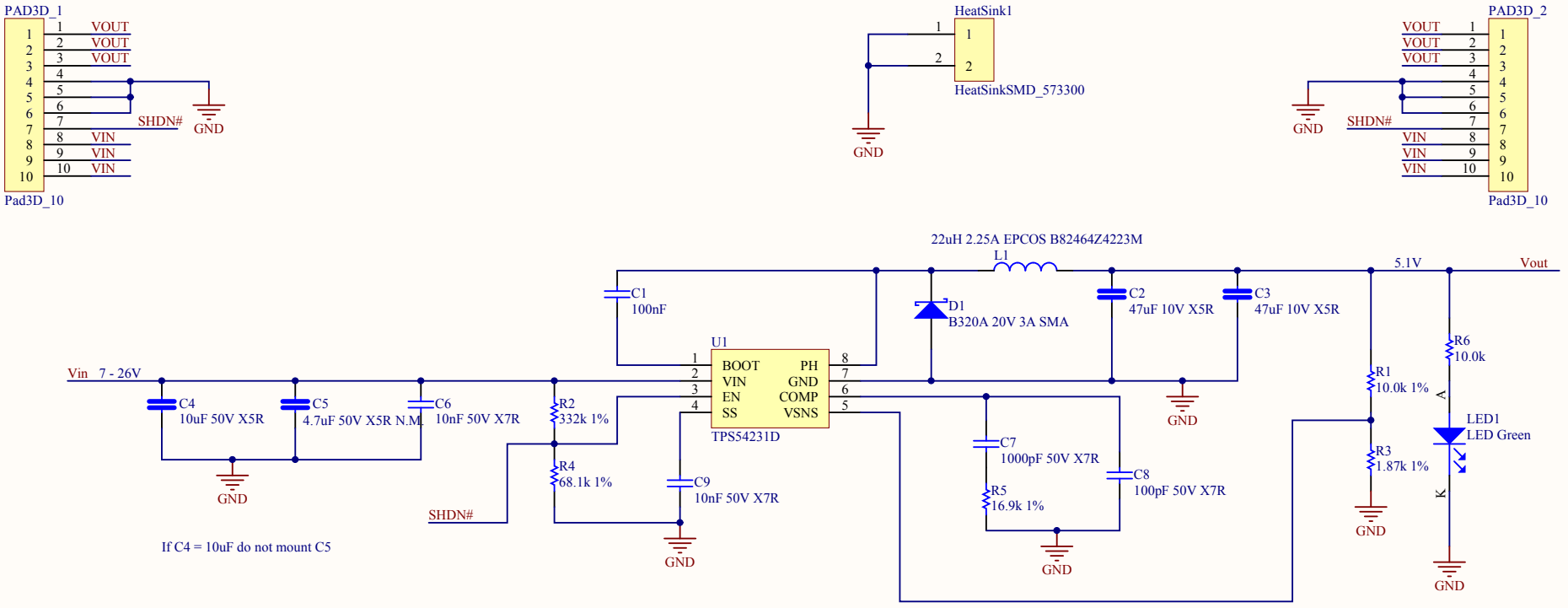

Title	***EPS Power Supply***		*ACME Systems srl*
Size: A4	Number:	Revision: 1.0	
Date: 03/11/2011	Time: 13.47.17	Sheet of	*www.acmesystems.it*
File: E:\ACMEProjects_2009_2\EPS\Schematic\EPS.SchDoc			

ACME SYSTEMS