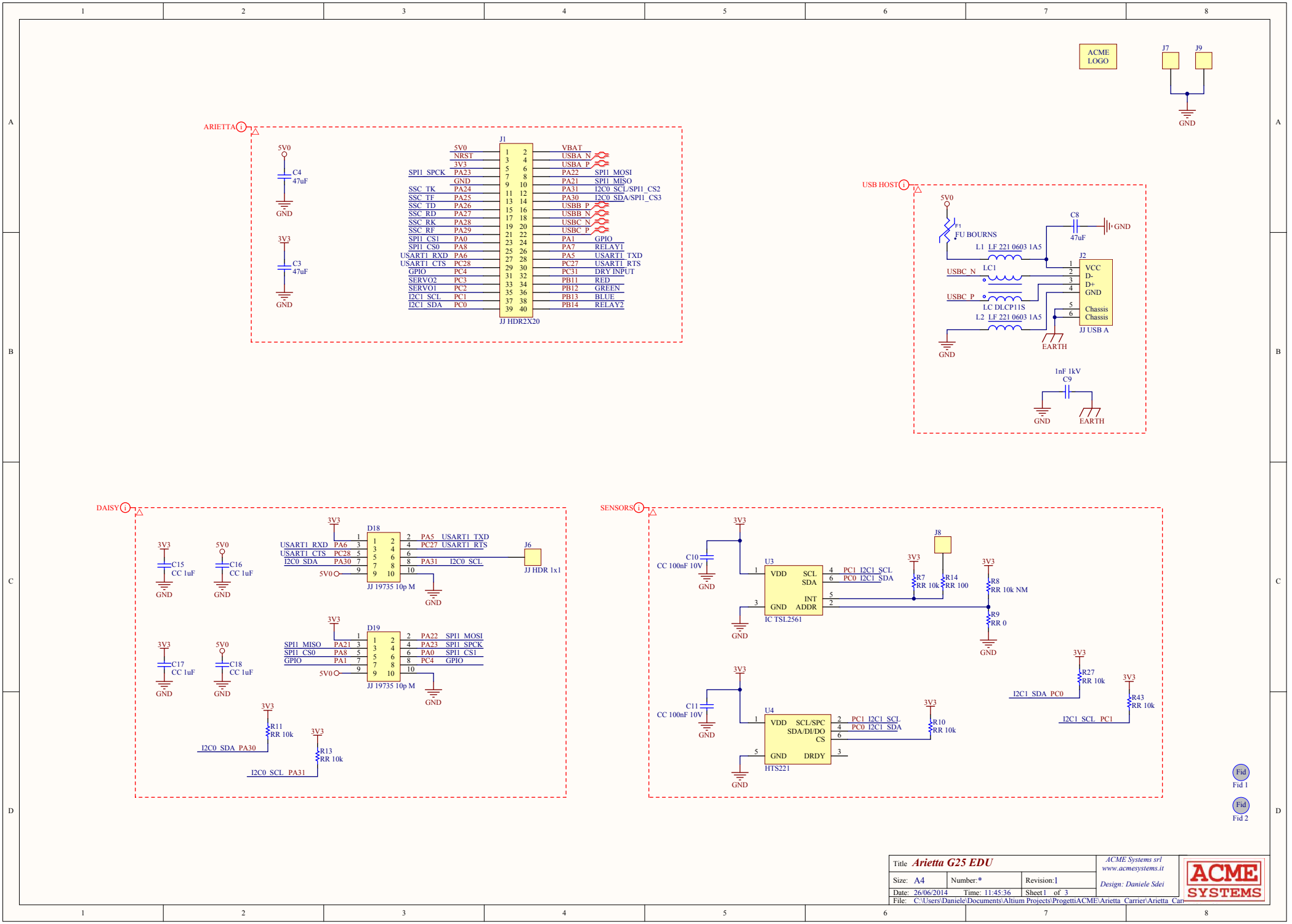

Title *Arietta G25 EDU*			*ACME Systems srl* *www.acmesystems.it*
Size: A4	Number:*	Revision:1	*Design: Daniele Sdei*
Date: 26/06/2014	Time: 11:45:36	Sheet 1 of 3	
File: C:\Users\Daniele\Documents\Altium Projects\ProgettiACME\Arietta_Carrier\Arietta_Car			

ACME SYSTEMS

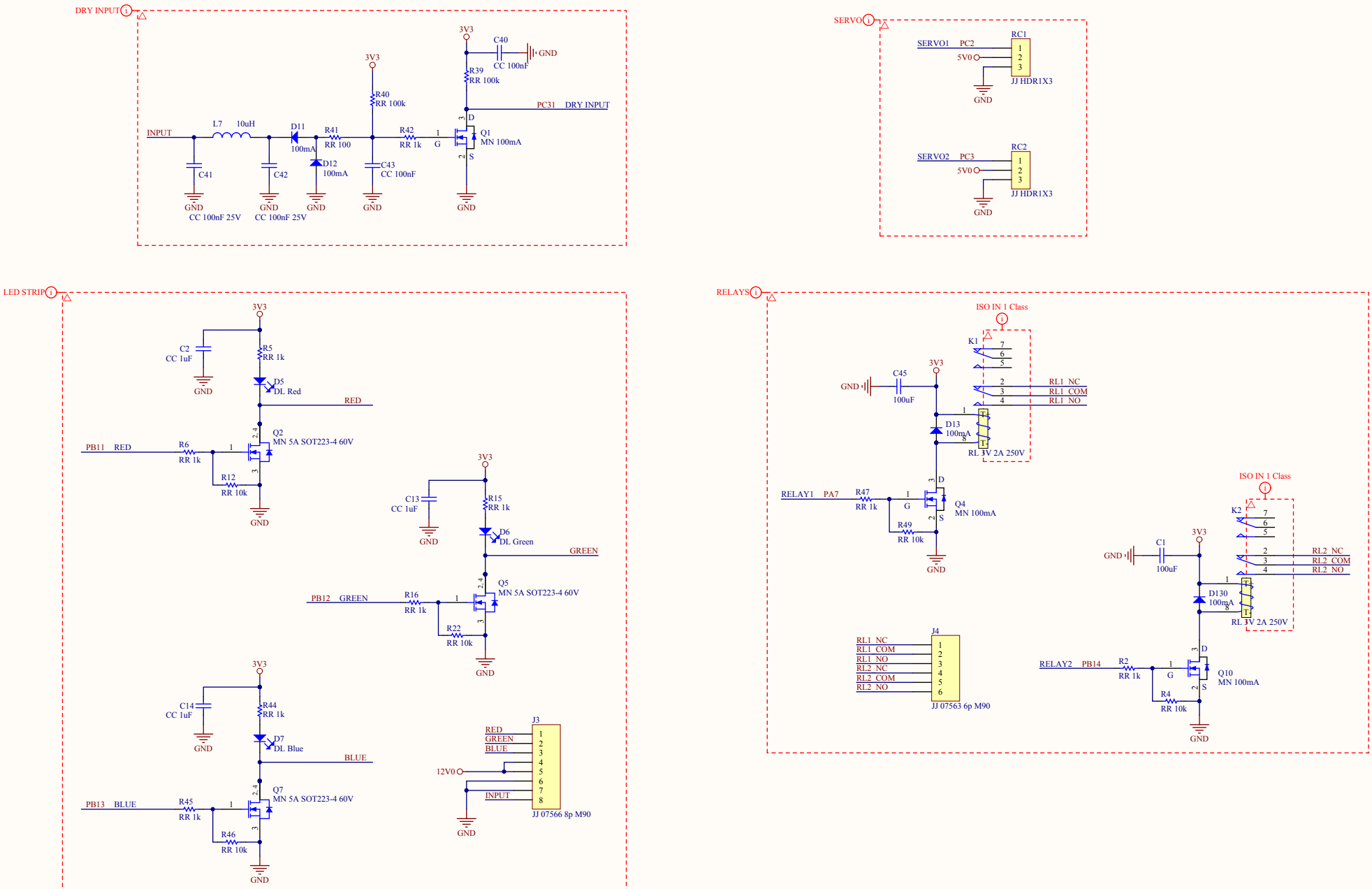

Title *Arietta G25 EDU*			*ACME Systems srl* *www.acmesystems.it*
Size: A4	Number:*	Revision:1	*Design: Daniele Sdei*
Date: 26/06/2014	Time: 11:45:36	Sheet2 of 3	
File: C:\Users\Daniele\Documents\Altium Projects\ProgettiACME\Arietta_Carrier\Arietta_Car			

ACME SYSTEMS

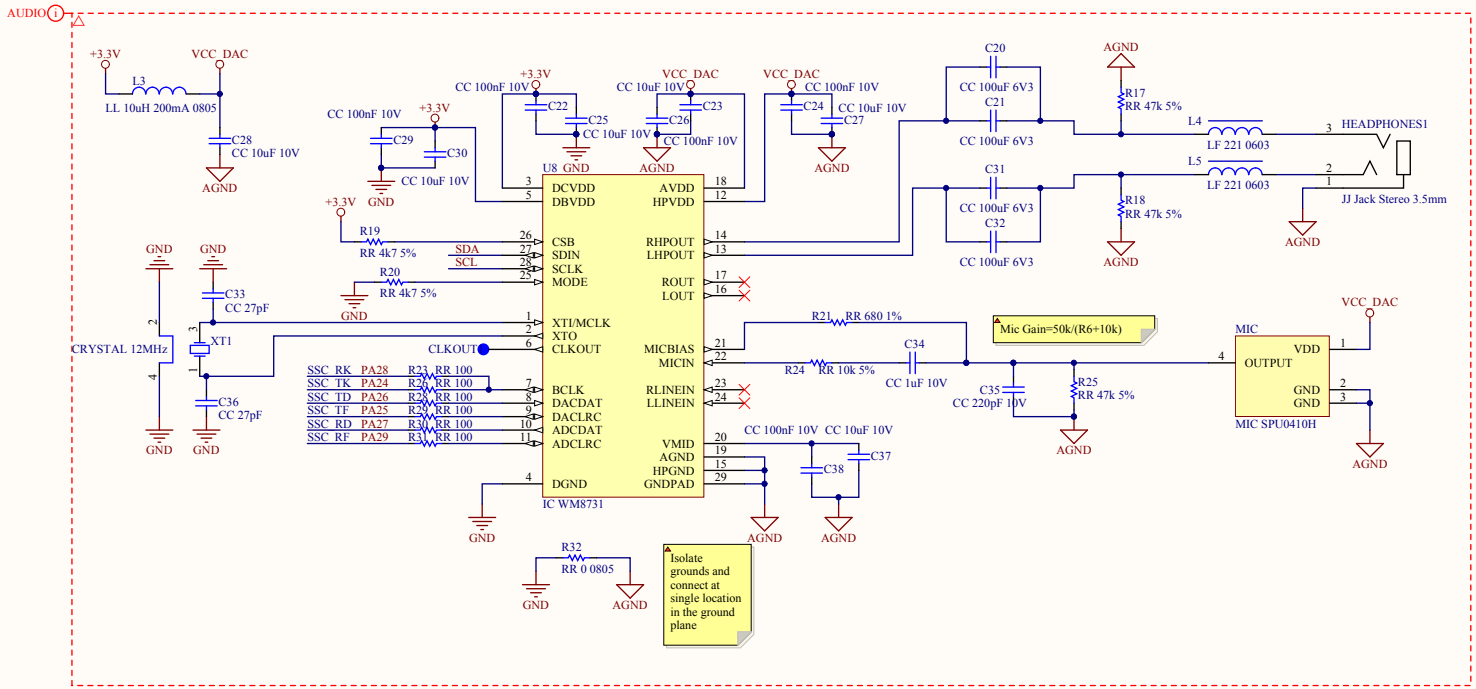

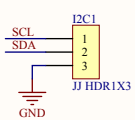

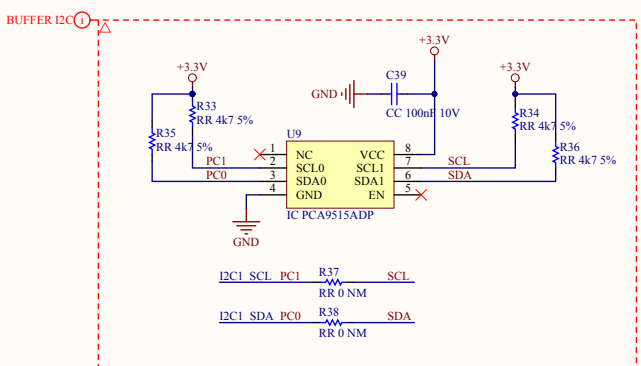

Title	*Arietta G25 EDU*		*ACME Systems srl* *www.acmesystems.it*
Size: A4	Number:*	Revision:1	*Design: Daniele Sdei*
Date: 26/06/2014	Time: 11:45:37	Sheet3 of 3	
File: C:\Users\Daniele\Documents\Altium Projects\ProgettiACME\Arietta_Carrier\Arietta_Car			

ACME SYSTEMS